SKUTT

WIRING DIAGRAM

MODEL:

- KMT-1231 SSRPK

PHASE: 1-PHASE

WIRES: 2W+G

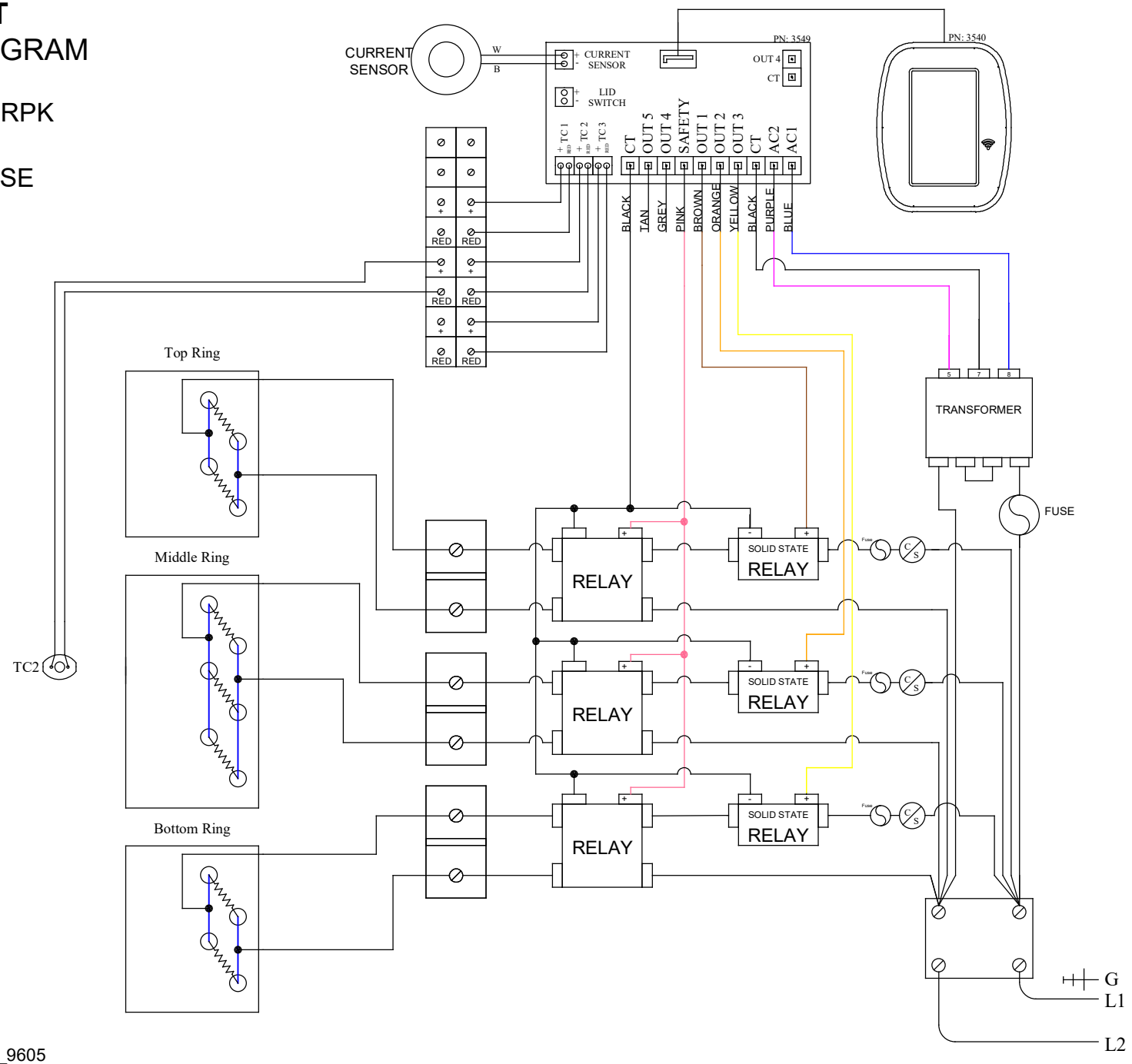

WIRING DIAGRAM: W_9605

REV: A | DATE: 05/22/19